SMOKE SIGNALS

Click on the link below to hear General Dwight D. Eisenhower's D-Day Speech
http://www.youtube.com/watch?v=WEyCjN9riiY

SUPREME HEADQUARTERS
ALLIED EXPEDITIONARY FORCE

Soldiers, Sailors and Airmen of the Allied Expeditionary Force!

You are about to embark upon the Great Crusade, toward which we have striven these many months. The eyes of the world are upon you. The hopes and prayers of liberty-loving people everywhere march with you. In company with our brave Allies and brothers-in-arms on other Fronts, you will bring about the destruction of the German war machine, the elimination of Nazi tyranny over the oppressed peoples of Europe, and security for ourselves in a free world.

Your task will not be an easy one. Your enemy is well trained, well equipped and battle-hardened. He will fight savagely.

But this is the year 1944! Much has happened since the Nazi triumphs of 1940-41. The United Nations have inflicted upon the Germans great defeats, in open battle, man-to-man. Our air offensive has seriously reduced their strength in the air and their capacity to wage war on the ground. Our Home Fronts have given us an overwhelming superiority in weapons and munitions of war, and placed at our disposal great reserves of trained fighting men. The tide has turned! The free men of the world are marching together to Victory!

I have full confidence in your courage, devotion to duty and skill in battle. We will accept nothing less than full Victory!

Good Luck! And let us all beseech the blessing of Almighty God upon this great and noble undertaking.

Dwight D. Eisenhower

When we think of the great June campaigns of World War II and those brave men who gave their all so that we remained a free society we think of June 6, 1944, D-DAY, I know I do. Recently I realized that there was another great June victory but this took place in 1942 in the Pacific Campaign and was spear headed by the Navy and their intrepid flyers, sacrificing their lives to keep us free. The fight was fought incredibly by the US fleet and the Japanese fleet never seeing each other during the battle. ***IT TOOK PLACE FROM THE AIR!***

THE BATTLE OF MIDWAY - FROM WIKIPEDIA

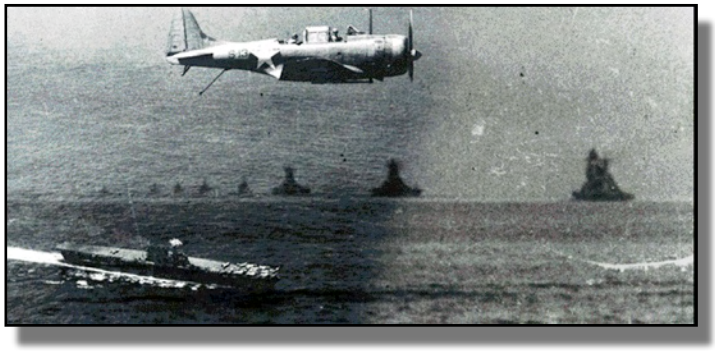

The **Battle of Midway** is widely regarded as the most important naval battle of the Pacific Campaign of World War II.Between 4 and 7 June 1942, only six months after Japan's attack on Pearl Harbor, and one month after the Battle of the Coral Sea, the United States Navy decisively defeated an Imperial Japanese Navy (IJN) attack against Midway Atoll, inflicting irreparable damage on the Japanese fleet.[8] Military historian John Keegan has called it "the most stunning and decisive blow in the history of naval warfare."[9]
The Japanese operation, like the earlier attack on Pearl Harbor, sought to eliminate the United States as a strategic power in the Pacific, thereby giving Japan a free hand in establishing its Greater East Asia Co-Prosperity Sphere. The Japanese hoped that another demoralizing defeat would force the U.S. to capitulate in the Pacific War.[10]

The Japanese plan was to lure the United States' aircraft carriers into a trap.[11] The Japanese also intended to occupy Midway Atoll as part of an overall plan to extend their defensive perimeter in response to the Doolittle Raid. This operation was also considered preparatory for further attacks against Fiji and Samoa.

The plan was handicapped by faulty Japanese assumptions of the American reaction and poor initial dispositions.[12] Most significantly, American codebreakers were able to determine the date and location of the attack, enabling the forewarned U.S. Navy to set up an ambush of its own. Four Japanese aircraft carriers and a heavy cruiser were sunk for a cost of one American aircraft carrier and a destroyer. After Midway, and the exhausting attrition of the Solomon Islands campaign, Japan's shipbuilding and pilot training programs were unable to keep pace in replacing their losses while the U.S. steadily increased its output in both areas.

As promised here is Long Island Silent Flyers Ed Anderson's second installment on "Low Cost Radio"

LOW COST RADIO Part 2 –An Open Source Option

A Research Project
By Ed Anderson

Last month I did an article about upgrading 72 MHz radios to 2.4 GHz. This offers an option for people who are happy with their current radio to stay with it while moving to 2.4 GHz. This article will focus on on a potentially lower cost entry point for new pilots buying their first computer radio or advanced pilots looking for a lower cost option for a more capable radio than the one they have now.

It has been common for new pilots to purchase an entry level radio, like a Spektrum DX6i for about $200 with receiver. But over time many will want to move up to a more capable radio, like a Spektrum DX7s, DX8, JR 9503, Hitec Aurora 9, Futaba 8FG Super or the Airtronics SD-10G. These cost between $300 and $600 and the receivers that go with these systems run $70 to $150 each. So now you have purchased a $200 entry level system then added $300 to $600 to get that advanced system level.

What if you could spend less than $200 and get that advanced level from the start? I may have found a path to that objective based on a new approach to RC radio systems, open source.

The FlySky TH9X radio came onto the market several years ago. You can find the same radio under the Turnigy, Eurgle and iMAX brands, but it is exactly the same hardware. The typical price runs from $60 to $100, depending on source and packaging. That usually includes an 8 channel receiver.

Initially it had a poor reputation for quality. The original 72 MHz version of this radio was OK but the early software was buggy. When they moved to 2.4 GHz the first RF system was not very robust. But things have evolved a lot since then. Today this radio is being used by giant scale pilots, glider pilots as well as parkflyer pilots, and the reports are good.

As discussed in the first article of the series, RC computer radios are made up of two components. The part that we think of as the radio is the box with the sticks and dials and the main circuit board which includes a processor that runs the program that displays the menus. Thus we call these computer radios. This same processor runs the software that translates stick and switch input into signals that are sent to the radio frequency section, RF, of the radio to be transmitted to the receiver in the plane. Some systems are one way and some systems are two way to enable telemetry back to the ground.

Since the practice of changing 72 MHz channel modules was eliminated with 2.4 GHz most new 2.4 GHz radios have the RF section built in so you cannot easily change it. Others, like the FlySky TH9X and the Hitec Aurora 9 have a modular RF system that can be easily removed and changed so you can use 72 MHz, 35 MHz, 50 MHz or a variety of 2.4 GHz systems.

The photo shows the RF module in a Turnigy 9X which is HobbyKing's version of the FlySky TH9X. The label is different but the RF system is the same as the FlySky TH9X.

From this point on I will refer to all the various branded version of this radio as the 9X. The 9X, typically comes with the FlySky RF module and an 8 channel FlySky receiver. Additional receivers are about $10. The radio has 3 dials, 6 switches and one 3 way switch. There are no side sliders and no controls on the rear of the radio. Battery and charger are not included. It comes with a battery holder for alkaline batteries.

The system provides 9 channels in FM PCM mode on 72 MHz or 8 channels in PPM mode which is what is used with the 2.4 GHz modules. This is exactly how my Futaba 9C works. So, this is an 8 channel radio on 2.4 GHz.

The standard set-up provides 8 model memories. The standard software is more than capable for airplanes, helis and basic glider functions. In fact the basic interface looks a lot like my Futaba 9C. You can see a video here that shows the user interface and some of the standard features.

Setting up the FlySky TH9X, Turnigy 9X, Imax9 or the Eurgle 9X
http://www.youtube.com/watch?v=893rdC0i-TU&feature=fvst

What really makes this radio system interesting, aside from the low price, is that the software is based on an open source model. That means that users can get into the code to add or enhance features and then give back their changes to the community in the spirit of openness and sharing.

Those of us from the computer industry are quite familiar with such things. Linux is one of the open source community's shining stars. It is a freely available operating system alternative to UNIX or Windows. For many companies it has replaced high priced UNIX systems as well as the Windows Server operating system. And major companies are moving their mission critical applications to Linux, a free operating system.

The FlySky TH9X is going through the same type of evolution. It offers the user a far less expensive radio system that is useable right out of the box. However it can be modified in hardware and software so you can load the available updates created by others. You can also change the RF system, as mentioned above.

Many users say they have no need to change the hardware or the software as the standard system suits them just fine. The 9X can certainly do more, with the standard software, than a Spektrum DX6i, and it costs $100 to $130 less than the DX6i.

If you want to rev-up the software, you can buy an add-in board, $45, which lets you load new, free software. There are several alternate software offerings, but ER9X software seems to be the most popular. http://code.google.com/p/er9x/ With ER9X software it becomes a mixing powerhouse and it can also store 12 to 16 models depending on the complexity of your set-up. You can download and upload models to your computer so you can have as many set-ups as you like. Just load the 12-16 you want to use today.

Owners who fly larger, more costly aircraft tend to replace the standard FlySky RF module and receiver with one from FrSky for its greater receiver selection, dual antenna diversity and telemetry system. Will a 9X with the FrSky RF system match a JR 9503, JR 11X, Futaba 8FG, Airtronics SD10G or a Hitec Aurora 9? Perhaps, and perhaps not, but the people I have spoken to on the forums say it is great for their Jets, 40% giant scale planes, thermal and slope gliders as well as their gas and glow planes. They say it can do almost anything. When I posted the list of mixes and flight conditions I use on my Futaba 9C Super, the response was that 9X, with the ER9X software, could recreate this set-up.

Graphic provided by www.alofthobbies.com USA based FrSky Distributor

Based on reports from high end users, the FrSky system is rock solid and will match any of the name brand systems for the reliability of the link, but it does so at a fraction of the cost. Adding a FrSky RF module and 8 channel receiver to the 9X costs about $45. By comparison, an 8 channel Futaba FASST module, with an 8 channel receiver for my Futaba 9C costs $300. FrSky receivers run $12 to $35, or about ¼ to ½ the price of comparable Spektrum, Futaba, Hitec, JR or Airtronics receivers.

The link below goes to a discussion on the Flying Giants forum. It includes several posts by XJET, Bruce Johnson. You may know him from the review videos he does as RCModelReviews. His comments are quite revealing and typical of the reports I have read.

http://www.flyinggiants.com/forums/showthread.php?t=62466

Here is a discussion about the 9X among some glider pilots. Glider pilots are very demanding when it comes to the mixing capabilities of their radios.
http://www.rcgroups.com/forums/showthread.php?t=1606788

9X Discussions – RC Universe
http://www.rcuniverse.com/forum/m_10985032/anchors_11028956/mpage_1/key_/anchor/tm.htm#11028956

Of course, if you read the forums you will find negative posts too. And while most are from pre-2010 you will find a few people who bought the current model and were not happy. But you can say the same for JR, Futaba, Hitec, Airtronics or Spektrum. The forums are full of those who swear by one of these top brands and those who trash them. However, for the major brands and the 9X, the positive reports far outweigh the negatives

So, what do you give up when you go to this low cost system? Customer service is poor and warranty repairs may be a challenge. HobbyPartz and HobbyKing probably provide the best support but even these may not be especially good. Don't expect to get on the phone line and have someone hold your hand while you try to set-up crow for your sailplane. For these things you turn to the user community.

XJet said that when he dropped and broke his 9X he just threw it away and got another one. Fixing it would cost as much as a new one. And since, with the addition of the SmartyParts board, you can load all your set-ups to the computer, you don't lose anything.

With my focus on high end radios I would suggest the FrSky RF system upgrade. However the standard FlySky RF system should be great for parkflyers and the receivers are only $8-$12.

While the overall manufacturing of the radio and main board gets good grades, people suggest you check the solder joints on the wires inside the radio. Occasionally something is not up to good workmanship standards, so you might have to resolder a wire. In the early days this was a big problem, today, not so much.

In the open source world the community is the support mechanism and there is plenty of that. There are forums dedicated to this radio, under the various brands, and people are developing software and hardware enhancements.

Clearly this is not the radio of choice for everyone. Out of the box it works fine, but if you want advanced mixing, more channels and the ability to upload your models to the computer you are going to have to invest some time and effort.

But if you can take the time to read and understand things, will take some personal initiative, then this could be an option that could save you hundreds and perhaps thousands of dollars. So, for some, this may be an excellent option or it could be the subject of a club project.

I believe the 9X, with the FrSky RF system and one of the upgraded software offerings can be set-up to at least match the features and mixes I use on the Futaba 9C Super. Considering the 9C Super cost $430 when new that would make this radio pretty capable radio at a fraction of the price.

The radio can be purchased for $60 to $100. The standard software and RF system should be fine for small electric planes, 2M gliders and your 40 class glow planes. Add the smartparts board for $45 and you can load ER9X or one of the other advanced SW systems. The upgrade software is free. Now you have invested $105 to $145 to add model memories and a lot of mixing capability.

If you like it then you might want to rev up the RF system to take advantage of the high end features of the FrSky RF system, the module with 8 channel receiver are about $45. With all the upgrades done you are in for about $150 to $190, which is less than the price of a Spektrum DX6i. That should put you into a highly capable radio with two RF systems and 2 receivers. That would be less than the price of an entry level DX6i with mixing and channel count that surpass the DX7s. And it is less than half the price of a Hitec Aurora 9, Futaba 9FG or an Airtronics SD-10G. And it would be about than 1/3 the price of a JR 9503.

As discussed last month, the FrSky receivers are about ¼ to ½ the price of the comparable Hitec, Spektrum, Futaba and JR receivers. To illustrate what this means, if you put up 5 planes using Futaba R617 FASST seven channel receivers or Spektrum AR7110 receivers you will spend $400 or more in receivers. Using FrSky 8 channel receivers you would spend about $150, saving $250 in receivers. That is enough for a second 9X for your summer house, car or as a back-up radio, with enough left over for a few more receivers. It might be worth a look.

I have a lot more information in the form of informational links, videos, and places to buy. There are also support forums for these systems. If you are interested, send me a note and I will forward what I have and share what I have learned. Ed Anderson aeajr@optonline.net I would be interested in hearing about your experience if you get one.

Also note that at our April LISF meeting one of our members did a rather extensive presentation on the FrSky telemetry system. There are a variety of modules available for things like battery voltage, altitude, motor temperature, air speed and GPS features.

SUMMARY

The goal of this discussion was to identify a lower cost path to a good, more advanced radio. The FlySky TH9X may offer such a path. Will the 9X take over the RC world? Probably not, but it offers the possibility of providing a highly featured radio system for less than 50% of the cost of the big name brands.

Clear Skies and Safe Flying!

Resources:

9X - FlySky/iMax/Turnigy/Eurgle FOR DUMMIES
http://www.rcgroups.com/forums/showthread.php?t=1616229#post21068397
Leader Hobby – Fly Sky TH9X FlySky makes the radio.
http://leaderhobby.com/list.asp?type=categories&categories=70
Hobbypartz
http://www.hobbypartz.com/79p-th9x-r9b-9channel-radio.html
Turnigy 9X – Hobbyking – USA warehouse –
http://www.hobbyking.com/hobbyking/store/uh_viewItem.asp?idProduct=19673
FlySky – wowRC
http://www.wowrcmodel.com/rc-accessories/radio-system/flysky-fs-th9b-fs-th9x-b-2-4g-9ch-radio-system-tx-rx-rc-transmitter-set-mode-2.html
Smartie Parts Programming Board – allows firmware updates and provides backlight for display
http://www.smartieparts.com/shop/index.php?main_page=product_info&cPath=3&products_id=331
Parkflyer RC – TH9X with ER9X already loaded – $160. Basically they take a $60 radio and charge you $100 to Flash it with updated SW. Also they will install the Smartyparts board for cost +$10.
http://parkeflyer.com/index.php?option=com_virtuemart&Itemid=275&gclid=CLbz1vDgzq8CFYRM4AodPQ2WHw

Meroke RC Club Presentation - Grumman X-29 - by Joe Pellergrino

Grumman X-29	
 A Grumman X-29 in flight	
Role	Experimental Fighter
Manufacturer	Grumman
First flight	1984
Status	Retired
Primary user	DARPA
Number built	2

Why Forward Swept Wings?

- Lower drag figures than best attainable from conventional aft swept wing (especially at Mach numbers around unity)
- Smaller wing
- Smaller engine
- Reduced fuel capacity
- Aircraft with FSW will be at least 25% smaller & 40% lighter
- Enhanced maneuverability & virtually spin-proof flying qualities

Technology that was Tested

- Forward Swept Wing
- Canard control surfaces,
- Aerodynamic instability of this arrangement increased agility
    - Relaxed Static Stability (-16) most unstable ever built
- Required the use of computerized Fly-By-Wire Flight control system
- Triple redundant hydraulic system
    - Flight Control system
    - Combined system (flight controls and utilities)
    - EPU (Emergency Power Unit system0 Flight controls only
- Required composite materials to control the aero elastic divergent twisting experienced by forward-swept wings, also reducing the weight.

Prior history to the X-29

The Ju 287 was intended to provide the Luftwaffe with a bomber that could avoid interception by outrunning enemy fighters.

- The swept-forward wing was suggested by the project's head designer, Dr. Hans Wocke as a way of providing extra lift at low airspeeds - necessary because of the poor responsiveness of early turbojets at the vulnerable times of take-off and landing.
- The first prototype was intended to evaluate the concept, and was cobbled together
  - Fuselage of a Heinkel He 177
  - Tail of a Ju 388,
  - Main undercarriage from a Ju 352
  - Nose wheels taken from crashed B-24 Liberators
  - Two of the Jumo 004 engines were hung under the wings, with the other two mounted in nacelles added to the sides of the forward fuselage.

- The second and third prototypes were to have six of these engines
  - The former with a cluster of three under each wing
  - The latter with two under each wing and one on each side of the fuselage, as the first prototype had
  - These machines were to have all-new, purpose-designed fuselages
  - The third prototype was also to carry armament and serve as the development aircraft for a production version.
- Before the second prototype was complete, though, the Junkers factory was over-run. Wocke and his staff, along with the two prototype aircraft, were taken to the Soviet Union.
- A final much-enlarged derivative, the EF 140, was tested in prototype form in 1949 but soon abandoned.

Specifications (Ju 287 V1)

- Crew: two, pilot and co-pilot
- Length: 18.30 m (60 ft)
- Wingspan: 20.11 m (65 ft 11 in)
- Height: 4.70 m (15 ft)
- Wing area: 61 m² (655 ft²)
- Empty weight: 12,500 kg (27,500 lb)
- Loaded weight: 20,000 kg (44,000 lb)
- Power-plant: 4 (prototype #1) or 6 (prototype #2) × Junkers Jumo 004B-1 turbojets, 8,825 kN (1,984 lbf) each

Performance

- **Maximum speed:** 555 km/h (329 mph)
- **Range:** 1,570 km (980 mi)
- **Service ceiling:** 9,400 m (30,000 ft)
- **Rate of climb:** 580 m/min (1,890 ft/min)

Armament

- Guns: 2 × 13 mm (.51 in) MG 131 machine guns in tail turret
- Bombs: 4,000 kg (8,818 lb) of bombs (proposed)

Design and development

- Two X-29As were built by Grumman from:
  - Two existing Northrop F-5A Freedom Fighter airframes (63-8372 became 82-0003 and 65-10573 became 82-0049)
    - The X-29 design made use of the forward fuselage and nose landing gear from the F-5As
    - The control surface actuators and main landing gear from the F-16.
    - The technological advancement that made the X-29 a plausible design was the use of carbon-fiber composites
      - The wings of the X-29, made partly of graphite epoxy, were swept at more than 33 degree forward

X-29 cockpit

- The X-29A demonstrated high maneuvering and control in flight testing
  - A maximum angle of attack of 67° was reached
  - The configuration, combined with a CG well aft of the aerodynamic center, made the craft inherently unstable
  - Stability was provided by the computerized flight control system making 40 corrections per second
  - The flight control system was made up of three redundant digital computers
  - Backed up by three redundant analog computers; any of the three could fly it on its own, but the redundancy allowed them to check for errors. Each of the three would "vote" on their measurements, so that if any one was malfunctioning it could be detected
  - It was estimated that a total failure of the system was as unlikely as a mechanical failure in an airplane with a conventional arrangement.

Aero-elastic considerations

- In a forward swept wing configuration, the aerodynamic lift produces a twisting force which rotates the wing leading edge upward
- Twisting results in a higher angle of attack, which increases lift, twisting the wing further
- This aero elastic divergence can quickly lead to structural failure.
- With conventional metallic construction, a torsionally very stiff wing would be required to resist twisting; stiffening the wing adds weight, which may make the design unfeasible
- The X-29 design made use of the anisotropic elastic coupling between bending and twisting of the carbon fiber composite material to address this aero elastic effect
- Rather than using a very stiff wing, which would carry a weight penalty even with the relatively light-weight composite, the X-29 used a laminate which produced coupling between bending and torsion
- As lift increases, bending loads force the wing tips to bend upward
- Torsion loads attempt to twist the wing to higher angles of attack, but the coupling resists the loads, twisting the leading edge downward reducing wing angle of attack and lift
- With lift reduced, the loads are reduced and divergence is avoided
- To test this theory hold your hand out of your car window and increase your speed

Operational history

- The first X-29 was taken aloft on 14 December 1984 from Edwards AFB with Grumman's Chief Test Pilot Chuck Sewell at the controls.http://en.wikipedia.org/wiki/Grumman_X-29 - cite_note-X-Planes-0#cite_note-X-Planes-0
- With that flight, the X-29 became the second jet-powered aircraft to fly with forward swept wings (with the Nazi Germany-era Junkers Ju 287, which first flew in 1944, being the first)
- On 13 December 1985, one of the X-29s became the first forward swept wing aircraft to fly in supersonic, level flight.
- By August 1986 the X-29 was involved in flying research missions lasting more than three hours
- The first X-29 was not equipped with a spin recovery parachute, as it was not expected to go into a spin
- The second X-29 was given such a parachute and was involved in a high angle-of-attack research program
- This testing showed that the rudder was ineffective at high angles of attack
- High pressure gas (6000psi) nozzles were incorporated in the nose to disrupt the nose vortex effect and cause the air craft to diverge (turn)

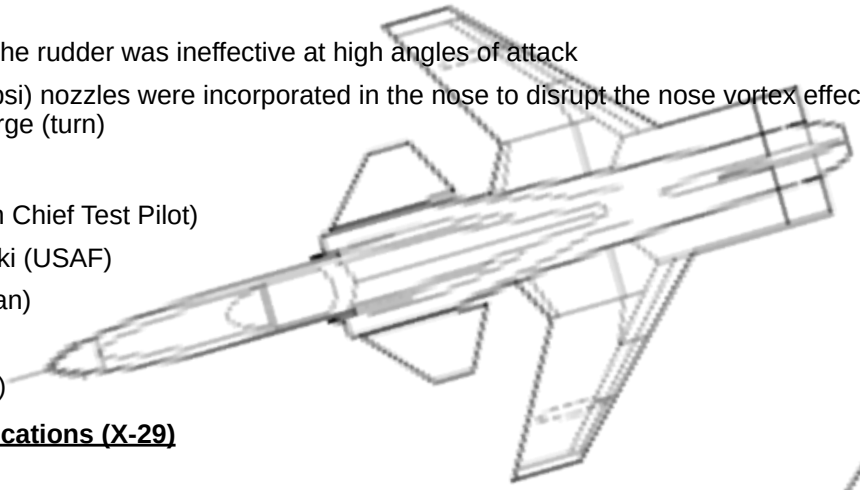

Pilots

- Chuck Sewell (Grumman Chief Test Pilot)
- Lt. Col. Ted Wierbanowski (USAF)
- Kurt Schroeder (Grumman)
- Roger Smith (NASA)
- Stephan Ishmael (NASA)

Specifications (X-29) **Specifications (X-29)**

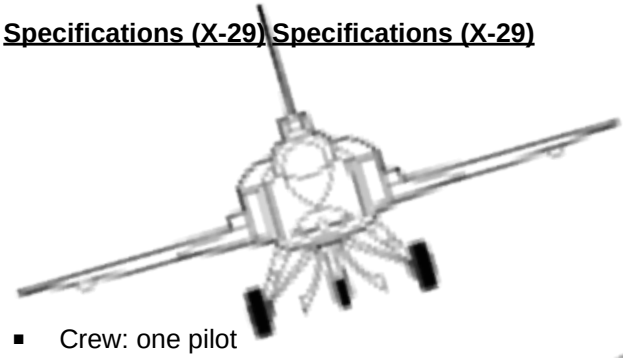

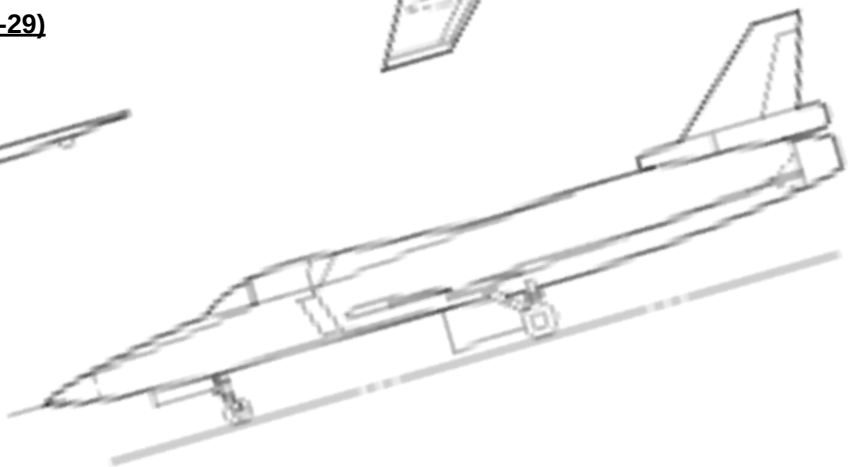

- Crew: one pilot
- Payload: 4,000 lb (1,810 kg)
- Length: 48 ft 1 in (14.7 m)
- Wingspan: 27 ft 2 in (8.29 m)
- Height: 14 ft 9 in (4.26 m)
- Wing area: 188.8 ft² (17.54 m²)
- Empty weight: 13,800 lb (6,260 kg)
- Max. takeoff weight: 17,800 lb (8,070 kg)
- Power-plant: 1 × General Electric F404 turbofan, 16,000 lbf (71.2 kN)
- Performance
- Maximum speed: Mach 1.8 (1,100 mph, 1,770 km/h at 33,000 ft (10,000 m))
- Range: 350 mi (560 km)
- Service ceiling: 55,000 ft (16,800 m)

Meroke RC Club "Come Fly with Us"

On May 19, 2012 the Meroke RC Club held it's "Come Fly with Us" event at the Lufbery Aerodrome at Cedar Creek Park. The weatherman cooperated and gave us a magnificent day for flying and instruction. Led by Registrar and organizer Charlie Lando, pilots Phil Friedensohn, Michael Cheung, Ted Evangelatos, Michael Hagens, Mark Klein and Tony Pollio took nearly fifty children of all ages to the skies over Long Island.

Nelson Ramos gave pre flight instruction on the use of the controls and thanks go out to Nick Guiffre, Russ Rhine,John Akios. Bryan Mueller, Robbie Wenk, Ed Decatrel, Lou Pinto, Gene Kolakowski and James Tavernese who volunteered their time to help make the event run smoothly and safely.

Top Gun *Gene Kolakowski reports...*

sunday may 20 , first fun fly of the year, great weather good , food and drinks . We ran four events 1- touch the circles, 2-nats special, 3-dead stick spot landing, and the bomb drop. the scoring was similar to last year . here are the scores ; pat boll 9 pts.- rich boll 13 pts,- allen berg and nelson ramos tied ,15 pts, gene kolakowski ,16 pts ,- jack tramuta 18 pts , james t. 22pts. and dave bell did a great job judging with the help of one of our new members Robby. just remember every body gets a mulligan so If you missed the first fun fly we have six more fun flys left.

Speaking of Top Gun

Recently the question of the day at the Lufbery Aerodrome is "Who will get their blue card first, Lou Pinto or his beautiful granddaughter Caitlyn Michelle Pinto"?

I always say "Ladies First".

CALENDAR

JUNE 3, 2012

20TH ANNUAL OPEN FUN FLY
Lufbery Aerodrome at Cedar Creek Park
Seaford, NY 9:30 AM - 3:00 PM
Pilot Registration closes at 8:45a

JUNE 7, 2012

Club Meeting

Show and Tell

JUNE 17, 2012

Club Meeting

Novice Virtual Fun Fly

JUNE 18, 2012

Top Gun - Lufbery Aerodrome

Send all suggestions to:
newsletter@meroke.com

BIRTHDAYS

June 3	Pat Saverese
June 5	Bernard Zarem
June 28	Joe Cieslewicz
June 28	Doug Frie
June 30	Frank Anzaldi